Delta Communication Ltd

FADE SIMULATOR

USER MANUAL

Authors: Kevin Hodson
Robert Heron

4 June 1998

Delta Communication Ltd
Business & Innovation Centre
Angel Way, Bradford, BD7 1BX
England

Telephone:
National: 01274 841326
International: +44 1274 841326

Facsimile:
National: 01274 841327
International: +44 1274 841327

www.deltacomm.co.uk

© Copyright 1998 The copyright of this document rests with Delta Communication Ltd. The document is supplied in commercial confidence and may not be passed to a third party without the express written permission of Delta Communication Ltd.

Fade Simulator User Manual			
Document History			
Document ID	**Customer project no.**		**2770**
9806/12/005/01	**Delta project no.**		**9806/12**
Page or doc. ID	**Change**	**Date**	**Initials**

Controlled Circulation List			
Copy No:	**Recipient's Name**	**Date:**	**Initials**
1			
2			
3			
4			
5			
6			
7			
8			
9			
10			

CONTENTS

1. FADE SIMULATOR 5

2. HARDWARE DESCRIPTION 7

2.1 THE PC 7

2.2 PATH ATTENUATOR UNIT 7

3. FADE SIMULATOR SPECIFICATION 10

3.1 FADE SIMULATOR PC 10

3.2 PATH ATTENUATOR UNIT 10

4. FADE SIMULATOR SOFTWARE 12

4.1 SOFTWARE DESCRIPTION 12

4.1.1 Set-up mode 12

4.1.2 Run mode 12

4.1.3 Playback mode 12

4.1.4 Remote Control Mode 13

4.2 PROGRAM FILES 14

4.3 OPERATION 14

4.3.1 Installation 14

4.3.2 Controlling the program 14

4.3.3 Getting started - the desktop 15

4.3.4 Getting started - the menu bar 15

4.3.5 Getting Started - the status bar 16

4.4 EDITING AN EVENT 17

4.4.1 To produce an event file 17

4.4.2 To edit an event file 19

4.4.3 To show an existing event 19

4.5 TO RUN AN EXISTING EVENT 19

4.6 TO REPLAY AN EXISTING EVENT 20

4.7 TO OPERATE UNDER REMOTE CONTROL 20

FIGURES

FIGURE 1 : FADE SIMULATOR CONFIGURATION 6
FIGURE 2 : REAR PANEL OF FADE SIMULATOR 7
FIGURE 3 : VARIATION OF C/NO WITH FADE DEPTH 11

TABLES

TABLE 1 : CONNECTOR ASSIGNMENTS 8
TABLE 2 : ATTENUATOR ASSIGNMENTS 8
TABLE 3 : CONNECTOR D1 CONNECTIONS 9
TABLE 4 : PATH ATTENUATOR SPECIFICATIONS 10
TABLE 5 : FILES MENU 15
TABLE 6 : DEFINE FADE EVENT MENU 15
TABLE 7 : SCINTILLATION MENU 16
TABLE 8 : RUN MENU 16
TABLE 9 : REPLAY MENU 16
TABLE 10 : FADE DESIGNATIONS 17
TABLE 11 : REMOTE CONTROL PROTOCOL 21

1. FADE SIMULATOR

The fade simulator is designated Fade Simulator Type FS 22D. It is an advanced satellite simulator which creates dynamic and realistic signal fading and noise conditions for a laboratory based network. The fade simulator operates at an IF of 70 MHz with a passband of 50 to 90 MHz and provides the signal and noise level conditions which would be experienced by satellite modems undergoing an actual fade event.

The fade simulator provides signal paths for a link from one modulator to another demodulator and a separate similar path for a return link. In this manner two modems can be connected via the fade simulator through its two independent paths. It provides an uplink path from the first modulator (TX1) to the satellite and a downlink path to the first demodulator (RX1) as well as an uplink path from the second modulator (TX2) and a downlink path to the second demodulator (RX2). There are four paths each with its own fade control.

The fade simulator uses voltage controlled variable gain broadband amplifiers which act as variable attenuators and are controlled by a Personal Computer (PC). The fade simulator configuration is shown in Figure 1.

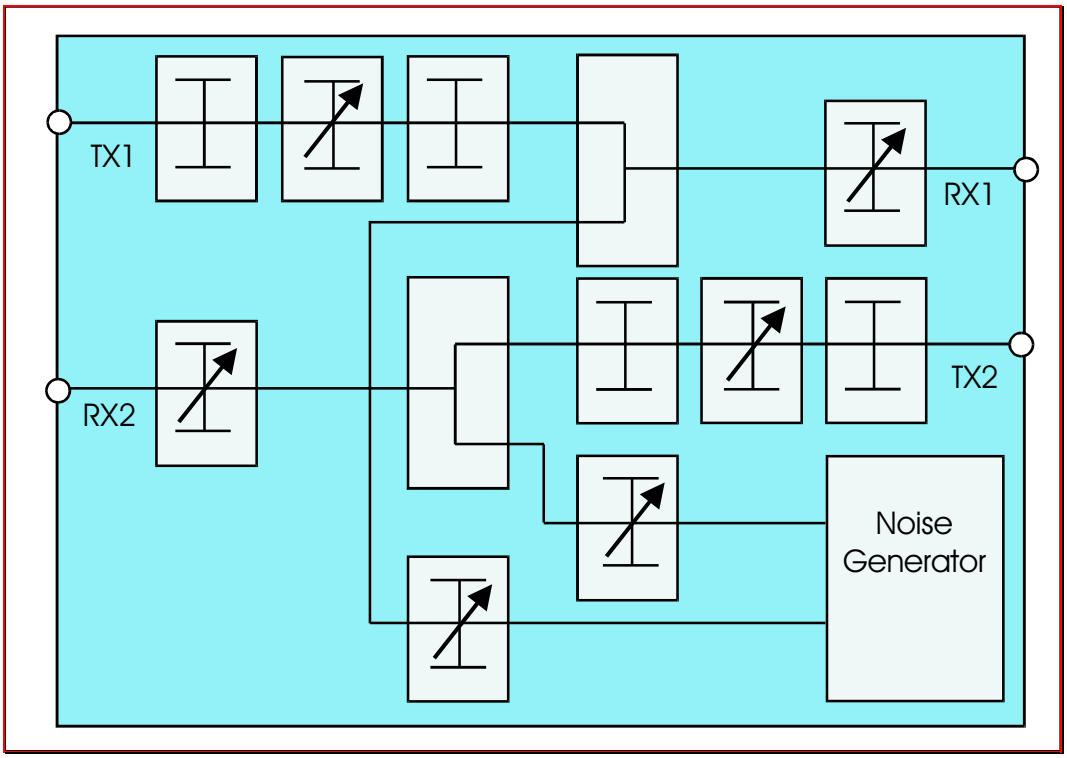

Figure 1 : Fade simulator configuration

2. HARDWARE DESCRIPTION

The fade simulator consists of an IBM PC or compatible and a unit containing the signal attenuators, the path attenuator unit (PAU). The PAU also includes a noise generator providing noise for the two downlinks.

2.1 THE PC

The PC is a standard Pentium unit equipped with 16 Mbytes of RAM, a hard disk drive, a CD ROM drive and a single floppy disk drive. The PC is equipped with an SVGA colour monitor and mouse. The PC houses an expansion card type Advantech PCL 727 which provides an interface to the PAU via a multiway cable. The computer runs the Windows 95 operating system although the software uses the MS DOS emulation facility of the operating system.

2.2 PATH ATTENUATOR UNIT

The PAU is built into a 19" rack mountable case. It contains six voltage controlled attenuators. The rear panel of the PAU houses the signal and interface connectors. The rear panel of the PAU is shown in Figure 2.

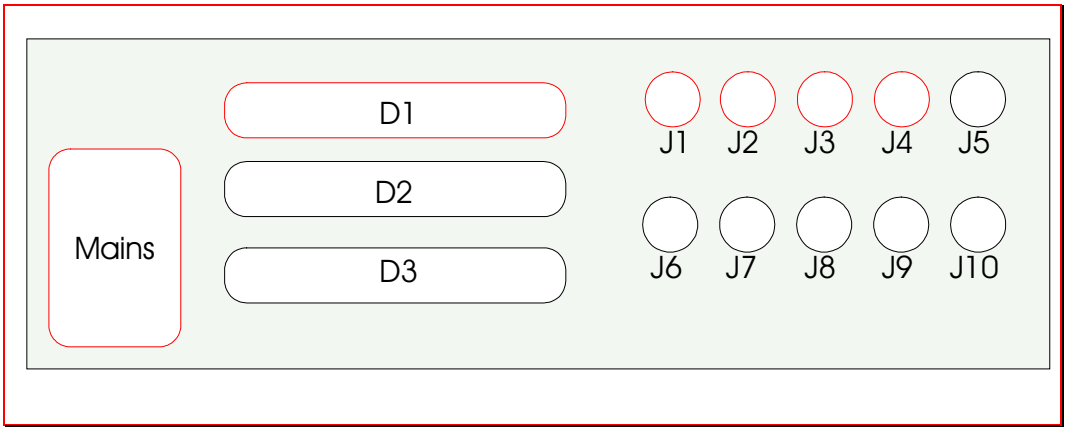

Figure 2: Rear panel of Fade Simulator

The connectors are assigned according Table 1.

Connector	Function	Type	Gender
Mains IEC	Power auto sensing	mains	Male
D1	Connection to PC	D Type 37 way	Male
D2	not assigned	reserved	n/a
D3	not assigned	reserved	n/a
J1	TX1	BNC	female
J2	RX1	BNC	female
J3	TX2	BNC	female
J4	RX2	BNC	female
J5	not assigned	reserved	n/a
J6	not assigned	reserved	n/a
J7	not assigned	reserved	n/a
J8	not assigned	reserved	n/a
J9	not assigned	reserved	n/a
J10	not assigned	reserved	n/a

Table 1 : Connector assignments

Pairs of connectors define signal paths which are associated with internal components and wiring colours as given in Table 2.

Path reference	Attenuator logical ref	Attenuator physical ref	Control wire colour
TX1 (J1) uplink 1	1	1	white/green
RX1 (J2) downlink 1	2	2	red/pink
TX2 (J3) uplink 2	3	3	black/orange
RX2 (J4) downlink 2	4	4	brown/yellow
Noise on RX1	5	5	purple/grey
Noise on RX2	6	6	blue/white+red

Table 2 : Attenuator assignments

Connector D1 is connected as shown in Table 3. The PC end of the flat cable joining the PAU to the PC is male and the PAU end is female.

Pin No	Function	Relative address	Att logical ref	Att physical ref	Wire colour	Cal file
1	+5 volts					
2	+12 volts					
3	Digital Gnd					
4	Digital Gnd					
5	D-to-A0 (V) A	0	1	1	white	calfile1
6	Anal Gnd					
7	D-to-A0 (I)					
8	D-to-A 1(V) B	2	1	1	green	calfile1
9	Anal Gnd					
10	D-to-A 1(I)					
11	D-to-A2 (V) A	4	2	2	red	calfile2
12	Anal Gnd					
13	D-to-A2 (I)					
14	D-to-A3 (V) B	6	2	2	pink	calfile2
15	Anal Gnd					
16	D-to-A3 (I)					
17	D-to-A4 (V) A	8	3	3	black	calfile3
18	Anal Gnd					
19	D-to-A4 (I)					
20	+5 volts					
21	D-to-A5 (V) B	10	3	3	orange	calfile3
22	Anal Gnd					
23	D-to-A5 (I)					
24	D-to-A6 (V) A	12	4	4	brown	calfile4
25	Anal Gnd					
26	D-to-A6 (I)					
27	D-to-A7 (V) B	14	4	4	yellow	calfile4
28	Anal Gnd					
29	D-to-A7 (I)					
30	Anal Gnd					
31	D-to-A8 (V) A	16	5	5	purple	calfile5
32	Anal Gnd					
33	D-to-A9 (V) B	18	5	5	grey	calfile5
34	Anal Gnd					
35	D-to-A10 (V) A	20	6	6	blue	calfile6
36	Anal Gnd					
37	D-to-A11 (V) B	22	6	6	white+red	calfile6

Table 3 : Connector D1 connections

3. FADE SIMULATOR SPECIFICATION

3.1 FADE SIMULATOR PC

Type 80586, one 1.4 Mbyte floppy disk drive, hard disk drive, CD ROM drive, SVGA colour monitor, 16 Mbytes RAM, mouse and Microsoft Win 95.

3.2 PATH ATTENUATOR UNIT

• no. of transmit signal ports	2
• no. of receive signal + noise ports	2
• port impedance	50 ohm
• port connector	BNC
• nominal signal level at J1 or J3	-10 dBm
• minimum signal loss J1 to J2 (or J3 to J4)	22 dB
• maximum signal loss J1 to J2 (or J3 to J4)	62 dB
• nominal signal level at J2 or J4 with min signal att	-32 dBm
• nominal signal level at J2 or J4 with max signal att	-72 dBm
• max noise power density at J2 or J4	-95 dBm/Hz
• min noise power density at J2 or J4	-105 dBm/Hz
• nominal maximum C/No at J2 or J4	73 dBHz
• nominal minimum C/No at J2 or J4	23 dBHz
• isolation between ports	30 dB min
• uplink or downlink path dynamic range	20 dB
• clear weather signal attenuator setting	0 dB
• noise dynamic range	10 dB
• clear weather noise attenuator setting	10 dB

Table 4 : Path attenuator specifications

The relationship between C/No and signal level is given in Figure 3.

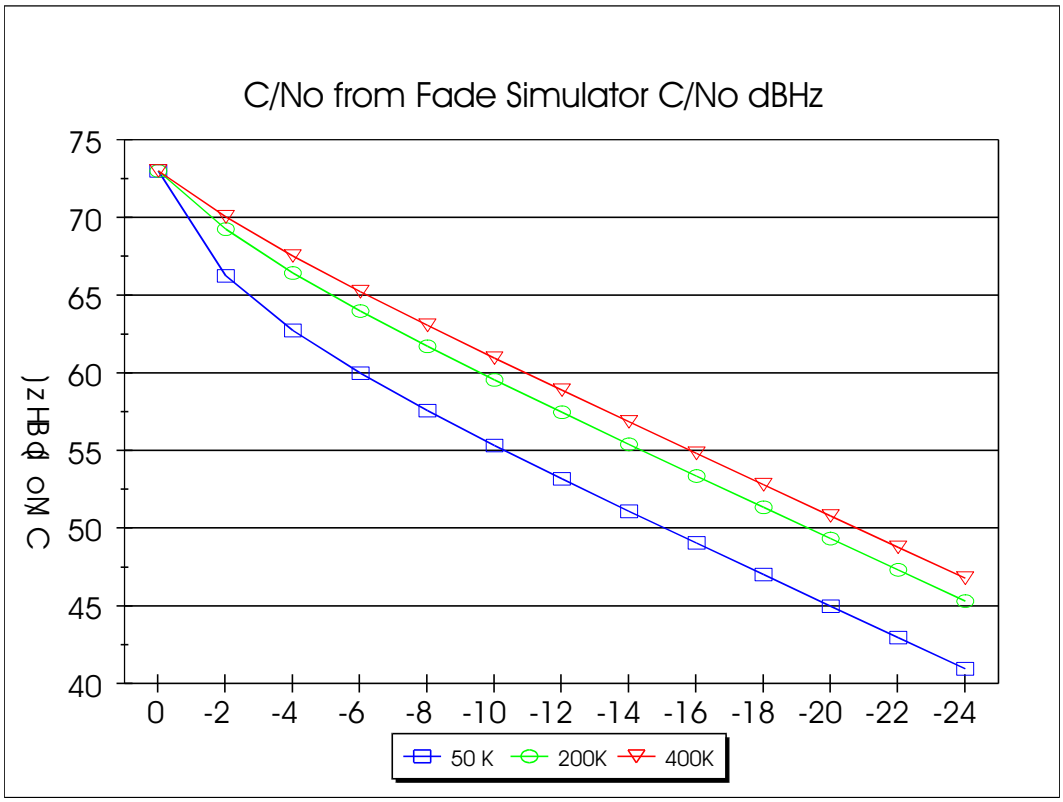

Figure 3 : Variation of C/No with fade depth

Notes to Figure 3

1. Loss between J1 and J2 (or J3 and J4) is 22 dB

2. C/N = C/No - 10 log(noise bandwidth in Hz)

3. The chart assumes a downlink fade only and an input signal power of -10 dBm. A different input signal level will impact on the output C/No in a linear fashion. An additional uplink fade of x dB will degrade the C/No by x dB.

4. Note that the noise attenuation is automatically set by the simulator according to the instantaneous fade level and the value of system noise temperature given in the desktop. If the fade is y dB and the system noise temperature has been set to z K the noise attenuator is set to; 10 - 10 log ((z + (1-10-y/10).270) / z) which, for y = 5 dB and z = 200 K is 7.16 dB.

4. FADE SIMULATOR SOFTWARE

4.1 SOFTWARE DESCRIPTION

The software runs on the PC. It has four modes, set-up mode, run mode, playback mode and remote control mode.

4.1.1 SET-UP MODE

In set-up mode it has the following functions;

- it allows the user to create up to four fade event profiles using a mouse driven icon within a graphics window,
- it stores the event profiles in an event file
- it allows the user to specify the total clear weather system noise temperature of the modems and their receive earth stations separately,
- it allows the user to specify the sky noise temperature (used to control the ratio between the signal attenuation and the noise increase).

4.1.2 RUN MODE

In run mode the fade simulator executes all or some of the fades according to the settings in the desktop menu. It controls the attenuators and displays the attenuation and increase in noise levels for each fade. Note that only the downlink fades have an associated noise component.

If the disk logging option is selected in the run menu the fade simulator will also log the exact details of the simulation to a log file with an extension of type *.log. Subsequently the log file can be replayed exactly as it was recorded.

4.1.3 PLAYBACK MODE

The fade simulator can play back files as well as running them. The difference is that a fade is run from the main points generated by the user in edit mode. Intermediate points are generated on the fly by means of a built in generator which

produces the scintillation component. Running the same fade repeatedly means the same macro points will be used but the scintillation points will be different from one run to the next.

This may or may not matter depending on the user's requirement. If it is a problem and if an exact replica of the first fade needs to be run then the fade simulator can play back a fade exactly from a log file which has stored all the data values used including the scintillation values.

4.1.3.1 BINARY FILE STRUCTURE

The fade files can be stored in two forms. The first is a compressed binary form which holds the support details of the fade and the macro points of the fade, that is those defined by the user, in a binary record. Typically the compressed fade file is 1k bytes or so, often less, depending on the number of macro points used in the fade. Files of this type are of the type *.fad. Many such fades can be stored in a small amount of disk space. Files of this type can be loaded from disk and run as required. You should be aware that the scintillation part of the fade, that is the micro points, are generated by a random function in the fade simulator. They will be different from one run to the next although, in general, this will not be apparent

4.1.3.2 ASCII FILE STRUCTURE

If, however, it is necessary to recreate an exact replica of the fade you should create a log file at run time which can be subsequently be replayed. The log file is large, typically about 300k, and contains all the macro and micro level detail.

4.1.4 REMOTE CONTROL MODE

The fade simulator can be controlled remotely via the serial port on the PC. A selection of up to eight fades must be made before the remote control mode is invoked. The fade simulator should be controlled according to the protocol given in Section 4.7.

4.2 PROGRAM FILES

The fade simulator program consists of the following files;

1. fadesim.exe
2. test1.fad
3. calfile1.cal
4. calfile2.cal
5. calfile3.cal
6. calfile4.cal
7. calfile5.cal
8. calfile6.cal

4.3 OPERATION

4.3.1 INSTALLATION

Make a copy of the floppy disk so that you can start again if there is a problem. The program can be installed on the hard disk of your computer. To do this copy all the program files to the directory of your choice.

4.3.2 CONTROLLING THE PROGRAM

A mouse is essential for the successful running of this program. The mouse cursor can be used to operate the pull-down menus from the initial window and clicking on the left hand button carries out the appropriate instruction. The mouse is used in the production of graphs.

Certain functions of the program can be controlled from the keyboard. You can either move around using cursor keys or by means of 'hot' letters. Hot letters are displayed in a different colour o brightness to the normal text characters. By pressing the appropriate hot letter on the keyboard you will be able to move directly to the appropriate choice on the menu. Pressing *alt-X* exits from the current menu and ultimately from the program. *Alt-F3* closes an existing window,

but this window will not be save automatically and the save procedure should always be carried out before closing a window.

4.3.3 GETTING STARTED - THE DESKTOP

The program opens with a blank screen bordered by a menu bar at the top and a status line at the bottom. To select the menu press the *F10* function key or move the mouse to the menu bar and click the left-hand button.

4.3.4 GETTING STARTED - THE MENU BAR

The procedures produced from the pull down menus are as follows. These menus can be opened by clicking the left-hand button or the mouse. Alternate keyboard function are shown in square brackets.

4.3.4.1 FILES

Files	**[alt F3]**	
Open	**[F3]**	**To open an existing event**
Save	**[F2]**	**To save an event**
Save as		**Save event under new name**
Ch Dir		**Navigate around directories**
About		**Information on program**
Exit	**{alt X]**	**Exit program**

Table 5 : Files menu

4.3.4.2 DEFINE FADE EVENT

Define fade event	**[alt F3]**	
Create new event	**[alt F1]**	
Edit event	**[alt F2]**	**Edit existing event**
Show event	**[alt F3]**	**View only the existing event**
Snap to grid	**[alt F4]**	**Snap event to a one minute grid**

Table 6 : Define fade event menu

4.3.4.3 SCINTILLATION

Scintillation	[alt S]	
On/Off	[alt F1]	Scintillation on or off
RMS level	[alt F2]	Define RMS level in range 0.1 to 3 dB
Period	[alt F3]	Define period from 0.05 to 60 minutes

Table 7 : Scintillation menu

4.3.4.4 RUN

Run fade event	[alt R]	
Run	[alt F1]	Scintillation on or off
Set speed factor	[alt F2]	Define speed of simulation 1 to 60 mins
Noise temps	[alt F3]	Define noise temperatures of receivers in range 50 to 700 K
Configuration	[alt F5]	Define which fades are being used
Display	[alt F6]	Define the fades to be shown on screen

Table 8 : Run menu

4.3.4.5 REPLAY

Replay event	[alt E]	
Open	[F3]	Opens a previously stored log file. Log file can be run from the dialog box which follows
Replay		Replays the open log file
Ch Dir	]	Navigate directories

Table 9 : Replay menu

4.3.5 GETTING STARTED - THE STATUS BAR

The status bar gives the function key commands for use without a mouse. These commands are shown in square brackets the above menus.

There are additional two commands not use on the menu bar, which are as follows;

- [alt-X] Exit from menu/program
- [alt-F3] Close existing window

4.4 EDITING AN EVENT

4.4.1 TO PRODUCE AN EVENT FILE

From the menu bar go to *Define Fade Event*, using the mouse or *[alt-D]*, followed by *Create new eve*nt using mouse, *[alt -F3]* or *[c]*. This will produce a fade edit window showing horizontal and vertical axes as follows;

- horizontal axis will show the time in minutes from 0 to 60 mins
- vertical axis will show the fade depth in dB from 0 - 25 dB.

The first fade to be defined is Fade 1 which is the link from TX1 to the satellite. The fades are defined according to Table 10. Use the menu option *Select Fade*, *[alt-F1]* or *[s]* to set the correct fade.

Fade 1	**Uplink from TX1**
Fade 2	**Uplink from TX2**
Fade 3	**Downlink to RX1**
Fade 4	**Downlink to RX2**

Table 10 : Fade designations

It is possible to set the fade options either for the specific fade being created or for all the four fades together. The fade options are scintillation status and snap to one minute grid.

At the bottom of the edit screen is a status bar showing, from left to right, as follows;

• end/F1	this closes the window
• RMS	scintillation (dB)
• time, fade	as a point is inserted the time and fade figures are shown
• period (min)	time interval between successive samples of scintillation
• snap to grid	snaps fade to one minute grid during edit mode
• complete/F2	when the required graph has been drawn, this completes the window showing the appropriate graph and scintillation, if required.

To produce a fade in graphical form, points can be plotted as required with the left-hand button of the mouse and then fixed by pressing the right-hand button at the same time (**these buttons must be pressed together to define the point initially plotted by the left-hand button**). The next point will then be plotted with the same procedure and consecutive points will then be joined up automatically. This procedure should be repeated until the required fade is defined across the screen. When complete *[F2]* is clicked the completed graph will be shown, with scintillation if this option is selected.

Note: If some of the points have been defined out of sequence the program will automatically produce the correct time sequence when complete [F2] is checked

If the fade is not satisfactory it can be edited. *End [F1]* the window and then choose *Edit event* from the *Define Fade Event* menu. New points can be defined as required and the fade completed. If scintillation is not required this can be switched off by clicking on rms scintillation or pressing *F3*.

When the wanted fade is completed press *End [F1]*. The fade should now be saved by selecting *Files [alt-F]* and choosing *Save as*. A dialogue window will then ask for the event to be named. A maximum of eight characters can be given to the name and the file extension of .FAD will be inserted automatically.

4.4.2 TO EDIT AN EVENT FILE

The file must first be opened (the last file to be edited or run will remain open until the program is closed). To open the file go to *Files [alt-F]* and *Open [F3]*. The file will not be shown until a further function is requested, that is, either *Show event*, *Edit event* or *Run event*. To edit an existing event, go to *Edit event [alt-F2]* which is under the *Define Fade Event* main menu option. This will show the window with the existing graph which can be amended as required.

To save this edited file either go to *File [alt-F]* and which will replace the original graph with the new one. If the original graph is also required, then go to Save as and save with a new name.

4.4.3 TO SHOW AN EXISTING EVENT

This will give a view-only window which cannot be edited or run. Go *to Define Fade Event [alt-D]* followed by *Show event [alt- F3]*.

4.5 TO RUN AN EXISTING EVENT

Various parameters can be set prior to running the event.

The scintillation can be altered by defining the rms level in the range 0.1 to 3.1 dB. The period of scintillation can be defined in the range 0.05 to 10 minutes. If required the scintillation can be switched off.

The fade can be run in real time as defined in the Create or Edit windows or it can be speeded up to run in either 1, 2, 10 or 30 minutes instead of the real time 60 minutes. To do this set the speed factor under the *Run Fade Event [alt-R]* menu.

The noise temperature of each receiver, base station or field terminal, can be defined in the range 50 to 700 K. To do this set the noise temperatures under the *Run Fade Event [alt-R]* menu.

The configuration of the simulation can be set according to which fade is activated. To do this set the configuration under the *Run Fade Event [alt-R]* menu.

The display can be set according to which fade is displayed and whether the noise temperature increase for either the base station or the field terminal is to be displayed. Any, none or all can be displayed. To do this set the display under the *Run Fade Event [alt-R]* menu. The run screen can get complicated if all six displays are shown together (four fades graphs and two noise increase graphs). Note there is no connection between the configuration and the display.

When all the parameters have been defined the event can then be *Run*. A graphical window appears which show the fade event and how it is being applied to the equipment. A clock with a second hand and a running colour bar shows the progression of elapsed time into the fade event. The mouse is not operative in the Run window. To exit press *F1*.

4.6 TO REPLAY AN EXISTING EVENT

Select a file of type **.log* from the disk by choosing open from the *Replay [alt-R]* menu item. The file can be replayed by pressing 'OK' in the window which opens or it can be replayed by selecting the sub menu *Replay [alt-R]* item.

4.7 TO OPERATE UNDER REMOTE CONTROL

The fade simulator can be run under remote control from another machine. Control is via the COM 1 serial port on the PC. This is operated at 9600 bit/s with 8 bits per character and even parity. The protocol for this operation is defined in vv.

Message	Direction	Message string
Start fade n	Master to fade sim	“Start fade n”
Fade n started	Fade sim to master	“Fade n started”
Fade n finished	Fade sim to master	“Fade n finished”
No fade n specified	Fade sim to master	“No fade n”
Stop fade n (in mid fade)	Master to fade sim	“Stop fade n”
Fade sim in local	Fade sim to master	“Simulator in local mode”

Table 11 : Remote control protocol